ITEM NO.	PART NUMBER	DESCRIPTION	QTY.	COMPONENT NOTES
1	50-00126	Connector, dc plug, 5.5x2.1xL22.5 mm, brass nickel plated	1	
2	30-00007	Wire, 2C BC, 18 AWG, UL2468, 300V, 80C, 4.4 mm, VW-1, PVC, 87A	1	
3	24-00016	Overmold, PVC, black	1	

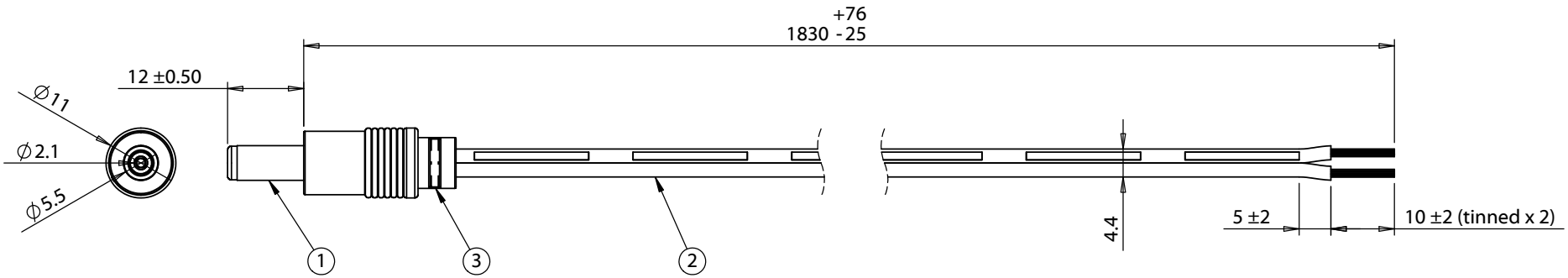

Notes:

Electical requirement: 3 A, 36 Vdc

Hi-Pot test: 600 Vac, 0.5 mA, 1 second

Wiring Diagram	
50-00126	wire color
center	black with stripe
sleeve	black

Revision:	Date:	Description:
A	1/19/2009	Re-issue CUI spec as Tensility
A1	9/1/2011	Updated description, connector, and wire information

Prepared: GL 2016.03.15 09:34:58 -07'00'

Verified: LA Digitally signed by LA DN: cn=LA, o=Tensility, ou=Engineering, email=QA002@Tensility.com, c=US Date: 2016.04.28 17:07:41 -07'00'

Dimensions are in millimeters.
Tolerances:
X: ± 0.5 mm
X.X: ± 0.3 mm
X.XX: ± 0.05 mm

Notes:

RoHS and REACH compliant

Function test: no open, no short circuit, no intermittent

Description:

Cable, 1830 mm, 5.5x2.1x12 mm, 50-00126 dc plug to stripped tinned, 18 AWG, 30-00007 wire

TENSILITY

tel 1.541.323.3228 *800* 877.670.7118
fax 1.541.323.4202 *web* tensility.com

Size: A

Part number: 053-0186R (CA-2187)

Scale: 1:1

Sheet 1 of 1

5 4 3 2 1